Bentleigh Vanity

Sizes - **1200mm**

Depth - **500mm**

Height - **760mm + top**

Features

Blum soft close drawer runners
20mm Quantum Zero Alpine White or 32mm Timber top
Polyurethane finish
Freestanding Vanity
Open storage + drawers

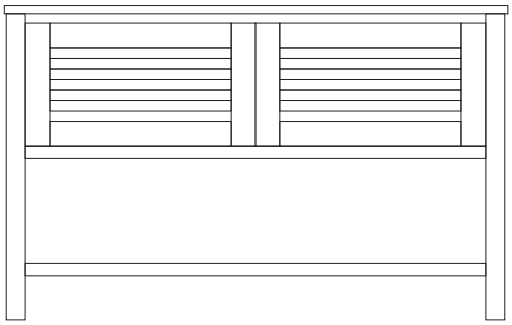

Front View

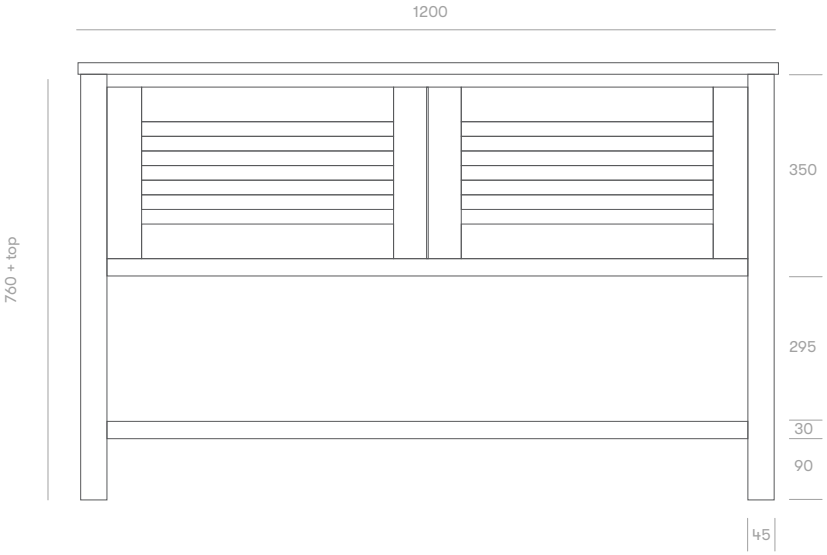

Side View

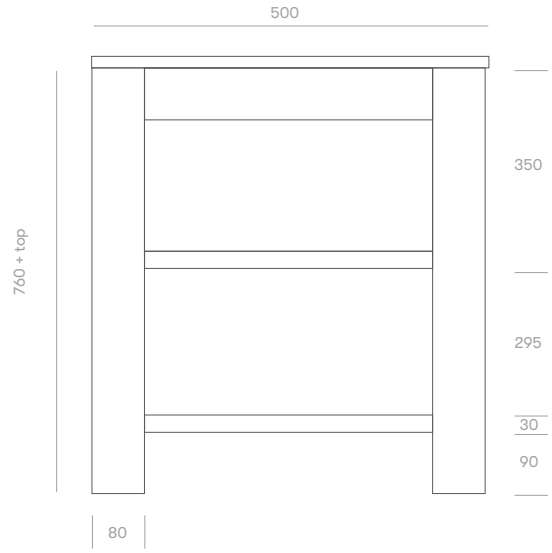

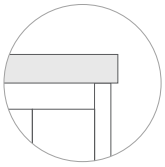

Top has 10mm overhang
on sides and front

Bentleigh Vanity

Section View

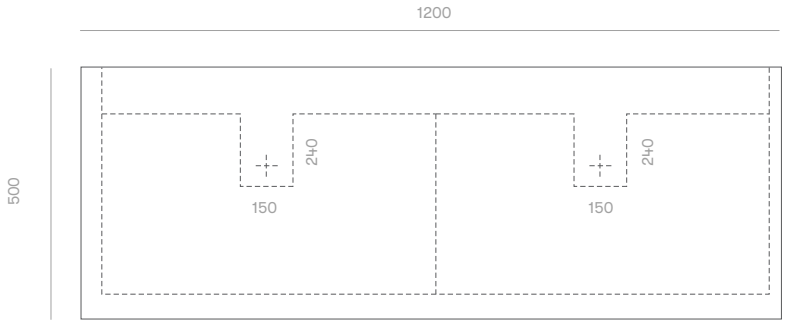

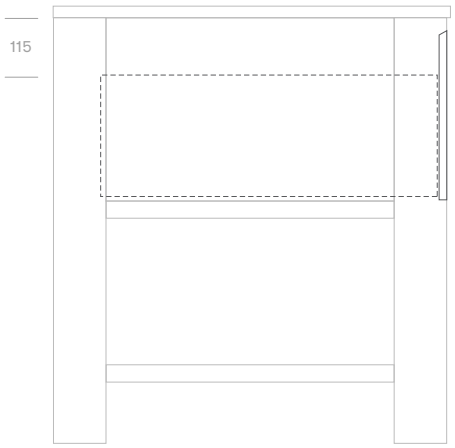

Plumbing Locations

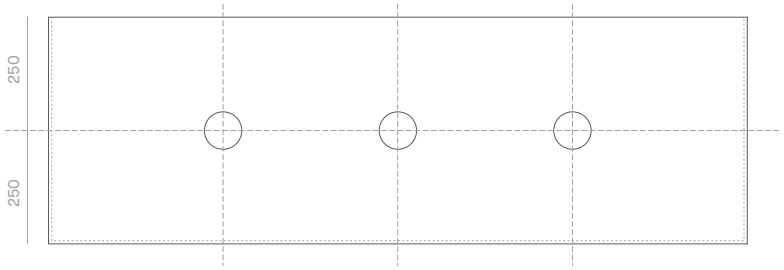

Vanity Size	600mm	750mm	900mm	1200mm	1500mm	1800mm	2100mm
Centre Plumbing	300mm	375mm	450mm	600mm	750mm	900mm	1050mm
Left / Right Plumbing	——	——	——	300mm	375mm	450mm	525mm

*All sizes in mm
*Cabinet size = 20mm less than top (10mm overhang on each side and front)
*Quantum Zero Alpine White top = 20mm / Timber top = 32mm
*All vanity stone and timber tops come with an 80mm waste cutout
as standard unless otherwise specified
*Suggested height from finished floor height to top of basin - 900 - 950mm
*Suggested height from finished floor to centre of tapware - 1050mm

Bentleigh Vanity

Sizes - **1500mm**

Depth - **500mm**

Height - **760mm + top**

Features

Blum soft close drawer runners
20mm Quantum Zero Alpine White or 32mm Timber top
Polyurethane finish
Freestanding Vanity
Open storage + drawers

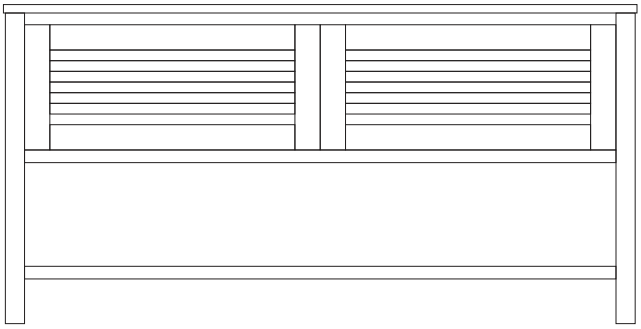

Front View

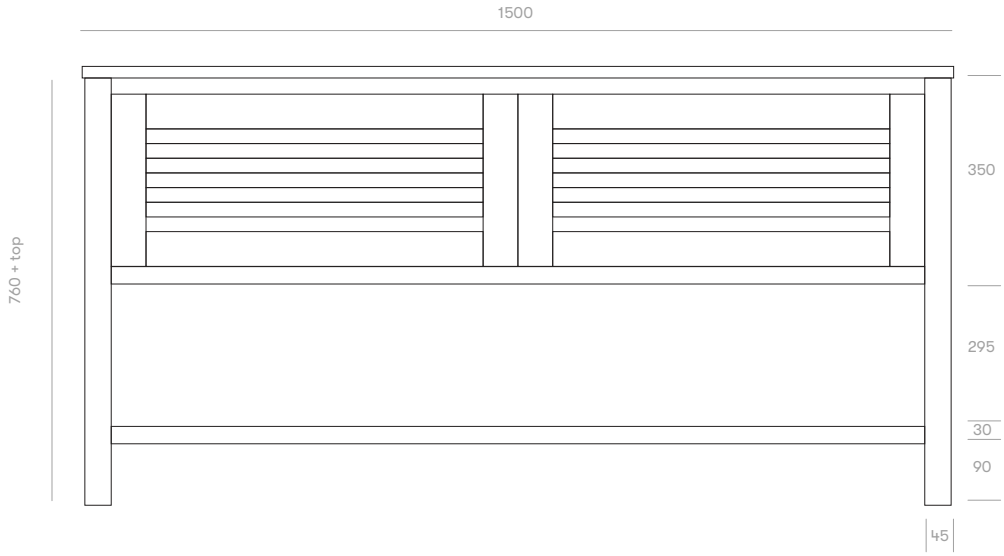

Side View

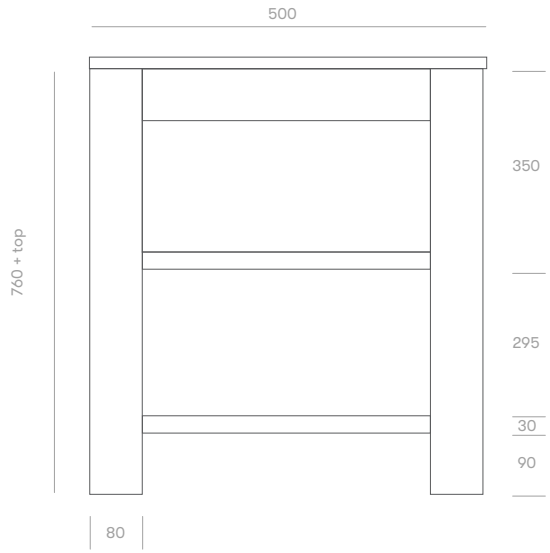

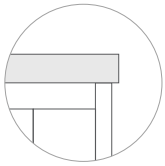

Top has 10mm overhang
on sides and front

Bentleigh Vanity

Section View

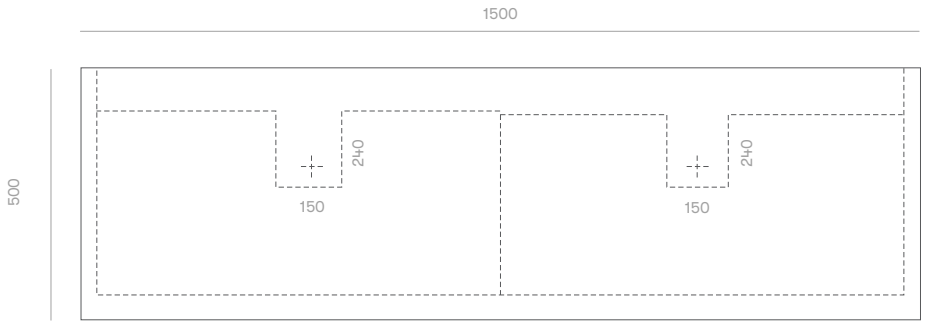

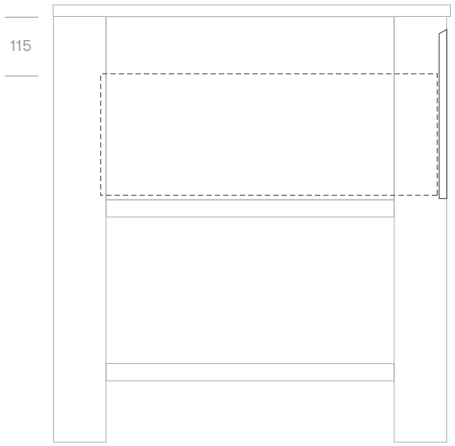

Plumbing Locations

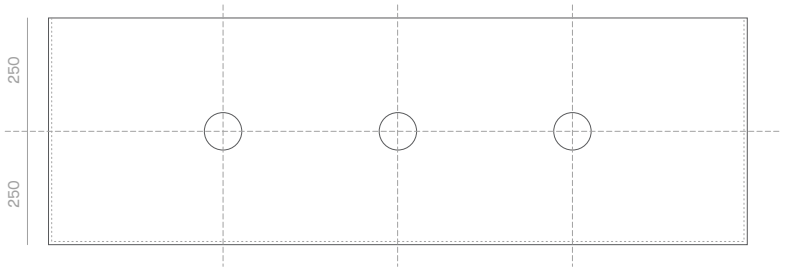

Vanity Size	600mm	750mm	900mm	1200mm	1500mm	1800mm	2100mm
Centre Plumbing	300mm	375mm	450mm	600mm	750mm	900mm	1050mm
Left / Right Plumbing	——	——	——	300mm	375mm	450mm	525mm

*All sizes in mm
*Cabinet size = 20mm less than top (10mm overhang on each side and front)
*Quantum Zero Alpine White top = 20mm / Timber top = 32mm
*All vanity stone and timber tops come with an 80mm waste cutout
as standard unless otherwise specified
*Suggested height from finished floor height to top of basin - 900-950mm
*Suggested height from finished floor to centre of tapware - 1050mm